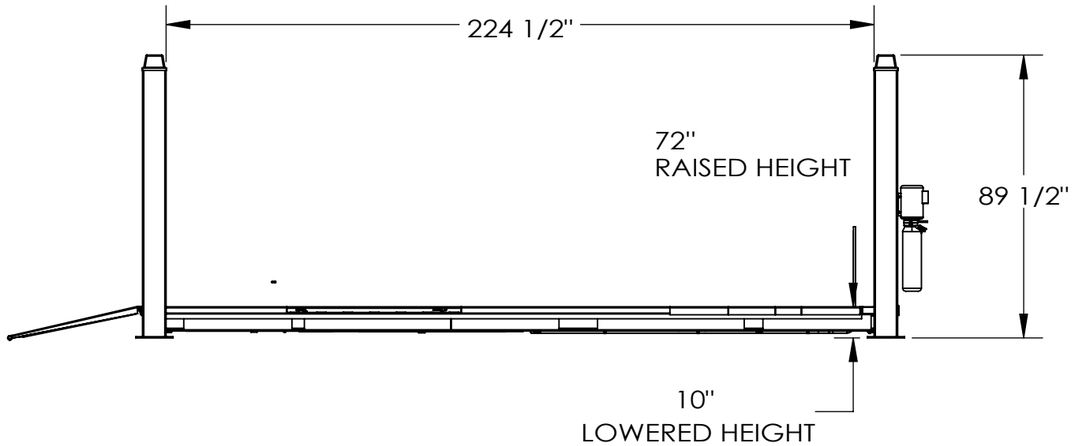

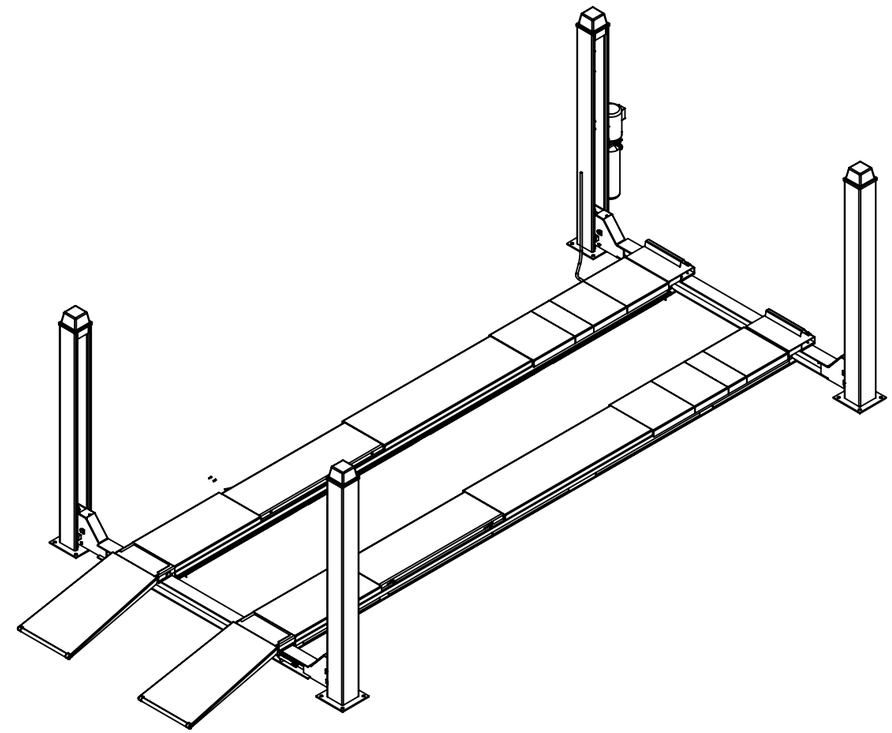

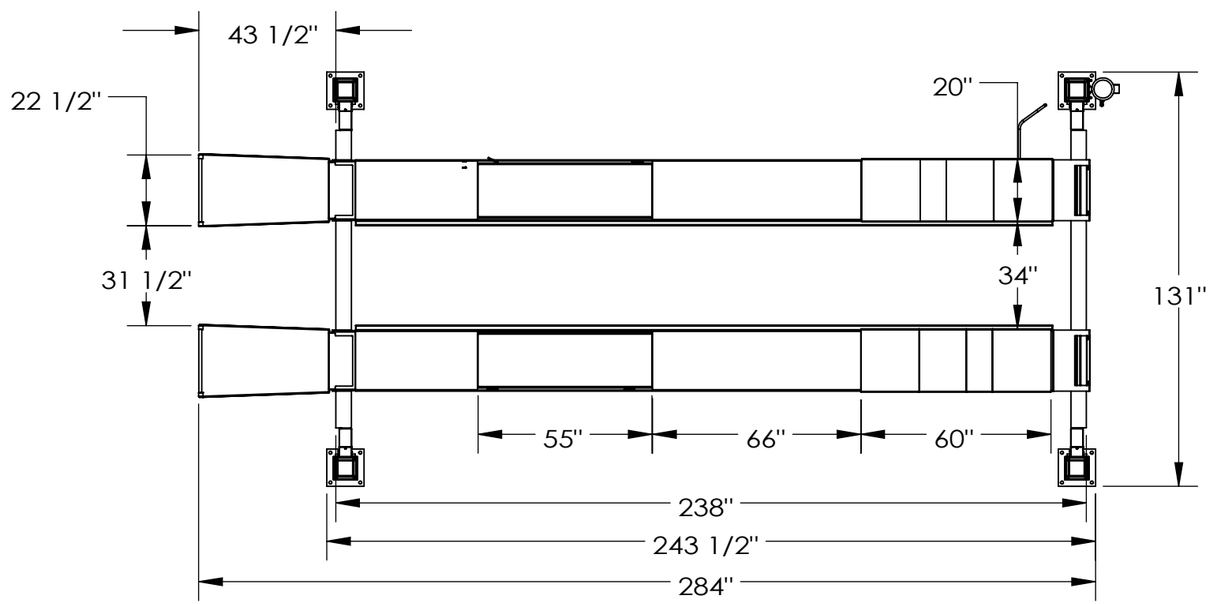

UNLESS OTHERWISE SPECIFIED: DIMENSIONS ARE IN [MM] INCHS **TOLERANCES:** FRACTIONAL: ±[1.5] 1/16" ANGLE: MACH ±1/2° BEND ±1° X.X" (1 DECIMAL): ±[3] 0.1" X.XX" (2 DECIMAL): ±[1] 0.03" X.XXX" (3 DECIMAL): ±[0.5] 0.010" **GEOMETRIC TOLERANCING PER:** ASME Y.14.5M-1994	**PROPRIETARY AND CONFIDENTIAL** THE INFORMATION CONTAINED IN THIS DRAWING IS THE SOLE PROPERTY OF TOTAL AUTOMOTIVE LIFTING SOLUTIONS INC. (TLS). ANY REPRODUCTION IN PART OR AS A WHOLE WITHOUT THE WRITTEN PERMISSION OF TLS IS PROHIBITED.			**TOTAL AUTOMOTIVE LIFTING SOLUTIONS INC.** (905)847-1198 FAX (905)891-1214 www.**TLSLifts.com**
				MODEL: TLS414ALCXx1
				CAPACITY: 14,000LBS
MATERIAL		NAME	DATE	SIZE / PART# / REV.
FINISH	DRAWN	S.Z.	27/12/2012	B / ALT. PART#
	CHECKED			
DO NOT SCALE DRAWING	APPROVED			SCALE: 1:48 / SHEET 1 OF 1